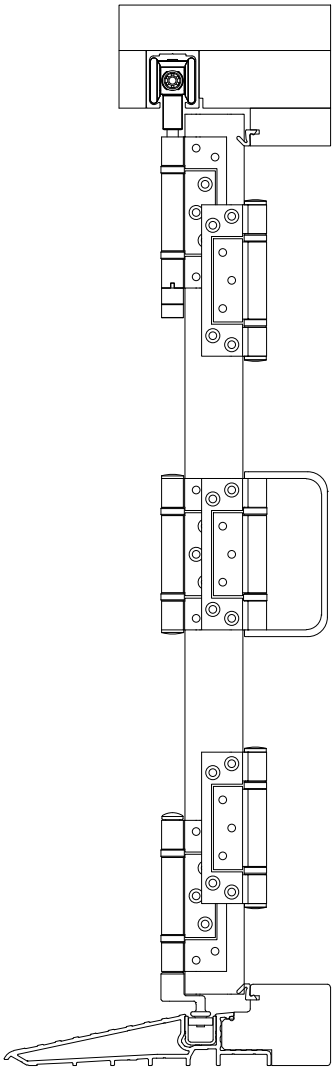

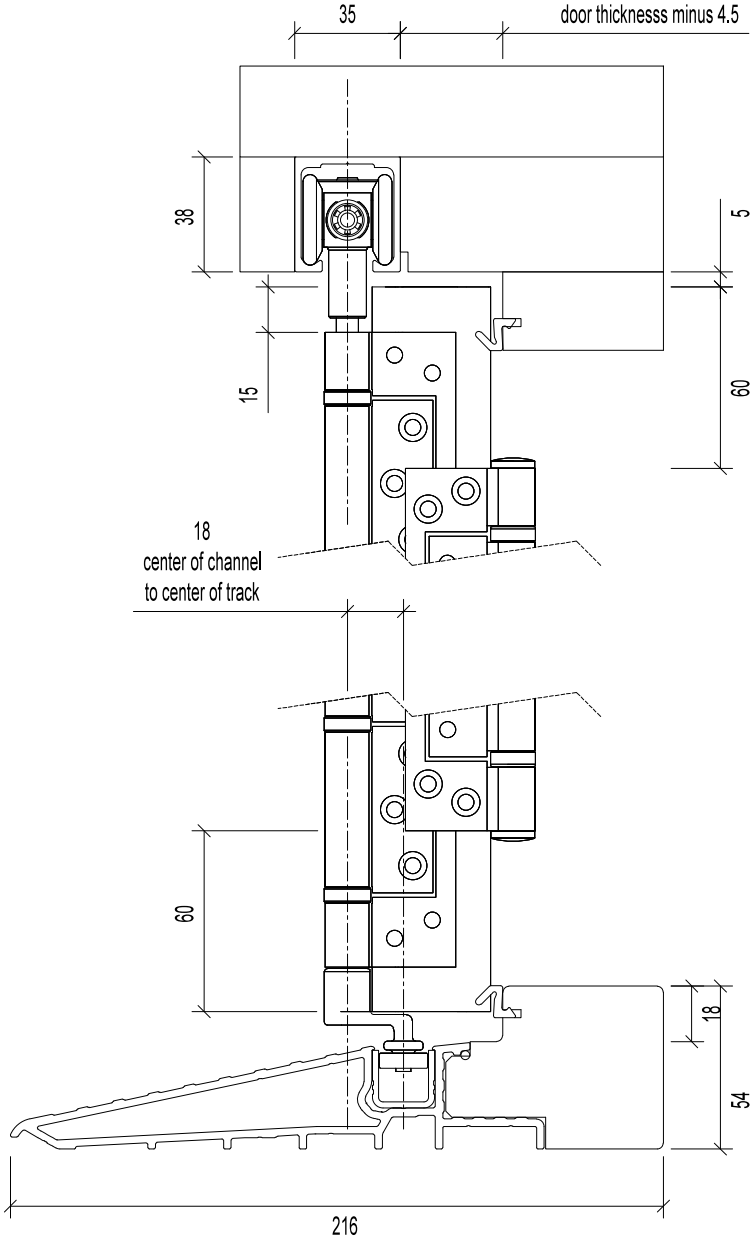
35
door thicknesss minus 4.5
38
5
15
60
18
center of channel
to center of track
60
18
54
216